Locating Pins for Jigs & Fixtures

Diamond, Tip Shape Selectable

Shouldered Type

RoHS10

Type: Threaded	Type: No Shoulder	Material	Hardness
LANQN_	LATQN_	4137 Alloy Steel	Treated Hardness 35~40 HRC min.
TLANQN_	TLATQN_	4115 Alloy Steel	Carburized Treated Hardness: 55 HRC min. (Depth: 0.7~0.8) / Anti-Carburizing on Threads

Reference: sin15°=0.259 tan15°=0.267 sin30°=0.5 tan30°=0.577 sin45°=0.707 tan45°=1

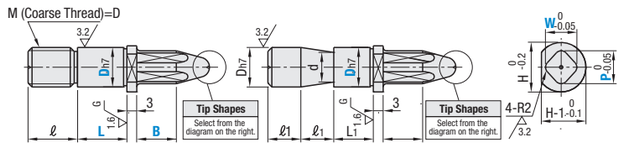

Tip Shape Selection

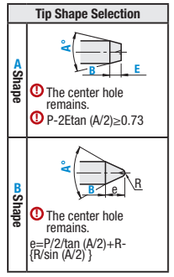

Shouldered

Part Number: Type	Tip Shape	D_{h7}		P 0.1 mm Increment	W 0.1 mm Increment	B 1 mm Increment	L Selection	A Selection	E (Shape A) Specify in 1 mm Increment	L_1	ℓ	$ℓ_1$	H	d	R	Applicable Set Screws
Threaded Set Screw LANQN LATQN TLANQN TLATQN	A (Tapered)	6	0 -0.012	7.0	5.0–17.0 (W≤P)	5–30 (B≤Wx3)	5 8 10	30 60 90 120	1–10	8	6	8	9	4	1	M5
		8	0 -0.015	7.0–9.0			5 8 10 12 15				10		11	5	1.5	
		10		7.0–11.0			8 10 12 15			10	12		13	7	2	M6
	B (Taper R)	10T								5	18					
		12	0 -0.018	9.0–13.0			10 12 15 18			12	15	10	15	9	3	M8
		16		13.0–17.0			12 15 18 20				18		19	13	4	

No Shoulder Type

RoHS10

Type: Threaded	Type: Set Screws	Material	Hardness
LNNQN	LNTQN	4137 Alloy Steel	Treated Hardness 35~40 HRC min.
TLNNQN	TLNTQN	SCM415 Alloy Steel	Carburized Hardness 55 HRC min. (Depth 0.7~0.8) Anti-Carburizing on Thread

Reference:sin15°=0.259 tan15°=0.267 sin30°=0.5 tan30°=0.577 sin45°=0.707 tan45°=1

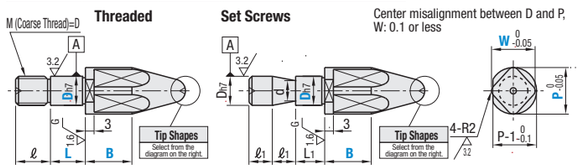

Tip Shape Selection

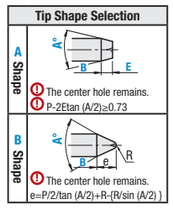

No Shoulder

Part Number: Type	Tip Shape	D_{h7}		P 0.1 mm Increment	W 0.1 mm Increment	B 1 mm Increment	L Selection	A Selection	E (Shape A) Specify in 1 mm Increment	L_1	ℓ	$ℓ_1$	d	R	Applicable Set Screws
Threaded Set Screw LNNQN LNTQN TLNNQN TLNTQN	A (Tapered)	6	0 -0.012	9.0–12.0	5.0–30.0 (W≤P)	5–30 (B≤Wx3)	5 8 10	30 60 90 120	1–10	8	6	8	4	3	M5
		8	0 -0.015	11.0–16.0			5 8 10 12 15				10		5	4	
		10		13.0–20.0			8 10 12 15			10	12		7		M6
	B (Taper R)	10T								5	15				
		12	0 -0.018	15.0–25.0			10 12 15 18			12	15	10	9	6	M8
		16		19.0–32.0			12 15 18 20				18		13	8	

Part Number Example

Part Number	Type	Tip Shape	D	P	W	B	L	A	E
LANQN	A		6	P7.0	W5.0	B15	L8	A30	E8
LNNQN	B		8	P12.0	W10.0	B18	L8	A60	

Part Number Alterations

Part Number	P	W	B	L	A	E	(KC / MC / RTC)
LNNQNA8	P12.0	W5.0	B10	L8	A30	E5	KC

Application Example

Best suitable for use with sloping works.

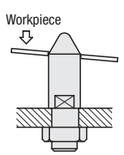

Alterations	Flat Position	Thread Diameter	Upper Relief Radius
	Shouldered / No Shoulder	MC	RTC
Code	KC	MC	RTC
Spec.	**Ordering Code:** KC Changes the flat position to 90° from the standard position 0°.	**Ordering Code:** MC8 Changes the thread diameter. D/3<M<D M min 3 Applicable to Threaded type only.	**Ordering Code:** RTC0.2 Changes R1 to R of the selection below. **Selection:** 0.2 R2 R3 RTC≤(H-P)/2 Applicable to Shouldered Type only.

Locating Pin for Jigs & Fixtures

Oval

Shouldered

RoHS10

Type: Oval, Precision Grade: Threaded	Oval, Precision Grade: Set Screw	Oval, Standard Grade: Threaded	Oval, Standard Grade: Set Screw	Material	Hardness
LNLANF	LNLATF	NLANF	NLATF	4137 Alloy Steel	Treated Hardness 35~40 HRC min.
TLNLANF	TLNLATF	TNLANF	TNLATF	4115 Alloy Steel	Carburized Treated Hardness: 55 HRC min. (Depth 0.7–0.8) Anti-Carburizing on Threads

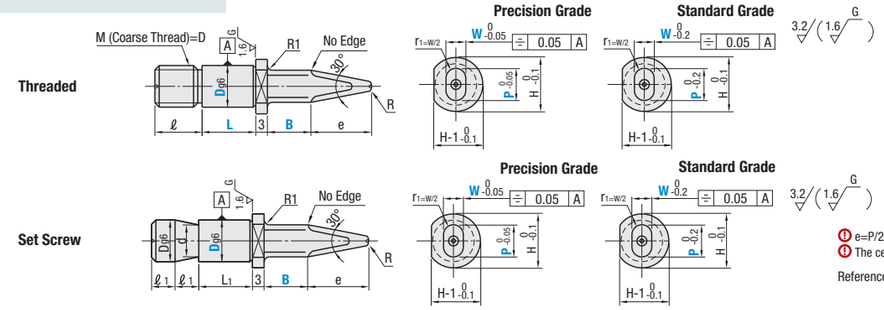

e=P/2/tan15° + R - (R/sin15°)
The center hole remains.
Reference: sin15°=0.259 tan15°=0.267

Part Number: Type		D_{g6}		P 0.1 mm Increment	W 0.1 mm Increment	B 1 mm Increment	L Selection	L_1	ℓ	$ℓ_1$	H	d	R	Applicable Set Screw
Precision Grade	Standard Grade	6	-0.004 -0.012	5.0–9.0	3.0–17.0 (P≥W+2.0)	5–30 Standard Grade (B≤Wx4) Precision Grade (B≤Wx3)	5 8	8	6	8	9	4	1	M5
LNLANF LNLATF TLNLANF TLNLATF	NLANF NLATF TNLANF TNLATF	8	-0.005 -0.014	5.0–11.0			5 12 15		10		11	5	1.5	
		10		7.0–13.0			10 12 15	10	12		13	7	2	M6
		12	-0.006 -0.017	9.0–15.0			12 15 18	12	15	10	15	9	3	
		16		13.0–19.0			15 18 20		18		19	13	4	M8

No Shoulder

RoHS10

Type: Oval, Precision Grade: Threaded	Oval, Precision Grade: Set Screw	Oval, Standard Grade: Threaded	Oval, Standard Grade: Set Screw	Material	Hardness
LNLNNF	LNLNTF	NLNNF	NLNTF	4137 Alloy Steel	Treated Hardness 35–40 HRC min.
TLNLNNF	TLNLNTF	TNLNNF	TNLNTF	4115 Alloy Steel	Carburized Treated Hardness: 55 HRC min. (Depth 0.7–0.8) Anti-Carburizing on Threads

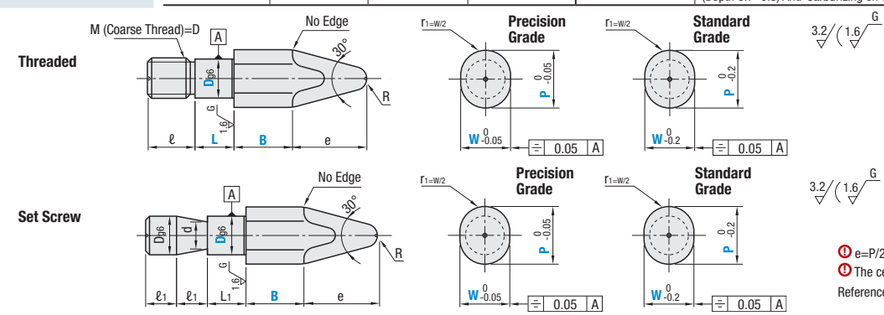

e=P/2/tan15°+R-(R/sin15°)
The center hole remains.
Reference: sin15°=0.259 tan15°=0.267

Part Number: Type		D_{g6}		P 0.1 mm Increment	W 0.1 mm Increment	B 1 mm Increment	L Selection	L_1	ℓ	$ℓ_1$	d	R	Applicable Set Screws
Precision Grade	Standard Grade	6	-0.004 -0.012	8.0–12.0	D+2≤ W≤P-2	5–30 Standard Grade (B≤Wx4) Precision Grade (B≤Wx3)	5 8	8	6	8	4	3	M5
LNLNNF TLNLNNF LNLNTF TLNLNTF	NLNNF TNLNNF NLNTF TNLNTF	8	-0.005	10.0–16.0			5 12 15		10		5		
		10	-0.014	12.0–20.0			10 12 15	10	12		7		M6
		12	-0.006	14.0–24.0			12 15 18	12	15	10	9	5	M8
		16	-0.017	18.0–32.0			15 18 20		18		13	6	

Part Number Example

Part Number	Type	D	P	W	B	L
NLANF		10	P11.8	W9.8	B10	L10
LNLNNF		8	P12.0	W10.0	B15	L12

Part Number Alterations

Part Number	P	W	B	L	(KC / MC / RTC)
NLANF10	P7.8	W5.8	B5	L10	KC

Alterations	Flat Position	Thread Diameter	Upper Relief Radius
	Shouldered	MC	RTC
Code	KC	MC	RTC
Spec.	**Ordering Code:** KC Changes the flat position to 90° from the standard position 0°. Applicable to Shouldered Type only.	**Ordering Code:** MC8 Changes the thread diameter. D/3<M<DM min 3 Applicable to Threaded Type only.	**Ordering Code:** RTC0.2 Changes R1 to R of the Selection below. **Selection:** 0.2 R2 R3 RTC≤(H-P)/2 Applicable to Shouldered Type only.