Add. Spec. Printed in Red

RSH3C - Slider Type Actuator (30-80 kg Max.) - Clean Room Version

RS SINGLE AXIS ROBOT

CE Compliant

See notes on CE Marking P.396

Features: Standard equipped with Vacuum Air Joint and Low Particulate Grease

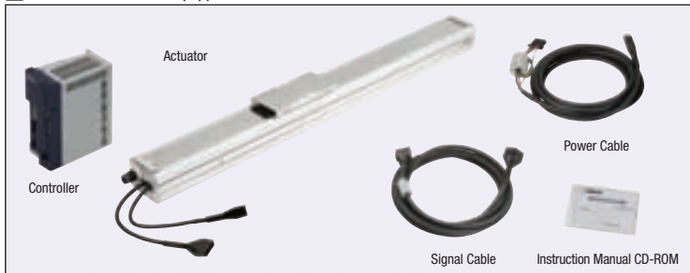

Controller Specification P.393 Cycle Time Graph P.400

Components: Actuator / Controller / Cable / (Battery) / (Noise Filter)

Accessory

	Controller I/O Specifications		
	NPN / PNP	CC-Link	DeviceNet
A Accessory	Instruction Manual on CD-ROM / Power Connector / EXT Connector / Dummy Connector		
	-	CC-Link Connector	DeviceNet Connector

Actuator Material / Surface Treatment

Components	Base Frame	Guide Rail	Slider	Side Covers
M Material	Aluminum	Steel	Aluminum	Aluminum
S	Anodize	-	Anodize	Anodize

General Specifications

Ball Screws	Motor	Position Detector	Service Ambient Temperature / Humidity
Ø15 (C7 Rolled)	AC Servo Motors 100W	Resolver	0 ~ 40°C, 35 ~ 85%RH (No condensation)

Standard Specifications

Terminology P.396

Type	Lead (mm)	Positioning Repeatability (mm)	Maximum Load Capacity (kg) Horizontal	Rated Force (N)	Maximum Velocity (Note 1) (mm/sec)	Stroke (mm)	Rated Running Life	Controller Input Power Supply	Maximum Positioning Points	Cleanliness (Note 2)	Vacuum (ℓ/min)
RSH3C	05	±0.01	80	339	300~105	150~1050 (50 Pitch)	10,000 km or more	100~115V 200~230V ±10%	255 points	CLASS10 (based on 0.1 μm per 1cf)	90
	10		60	169	600~210						
	20		30	84	1000~450						

(Note 1) Maximum speed varies depending on stroke. Please see Maximum Speed Table on the right page. (Note 2) In the case of 90ℓ/min vacuum.

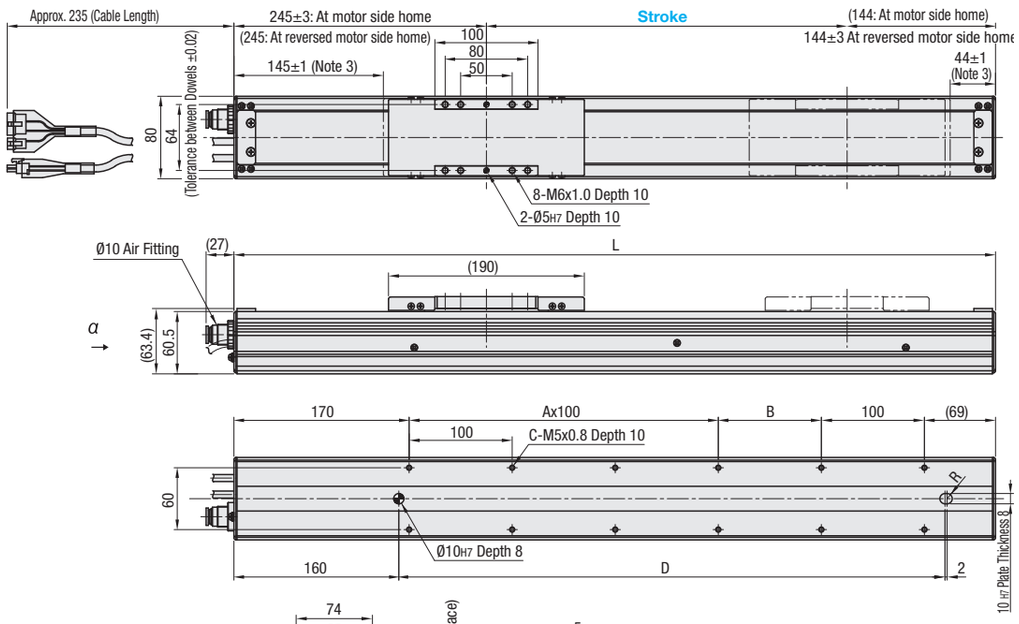

Arrow View α

* Recommended flat nut size: M3 (6x6xt1.6)

Part E: Detail of T slot

(Note 3) Distance from ends to the mechanical stoppers.
(Note 4) Minimum bending radius of cable is R50.

Dimensions / Mass

Type	Stroke (mm)	150	200	250	300	350	400	450	500	550	600	650	700	750	800	850	900	950	1000	1050
RSH3C	L	539	589	639	689	739	789	839	889	939	989	1039	1089	1139	1189	1239	1289	1339	1389	1439
	A	1	1	2	2	3	3	4	4	5	5	6	6	7	7	8	8	9	9	10
	B	100	150	100	150	100	150	100	150	100	150	100	150	100	150	100	150	100	150	100
	C	8	8	10	10	12	12	14	14	16	16	18	18	20	20	22	22	24	24	26
	D	330	380	430	480	530	580	630	680	730	780	830	880	930	980	1030	1080	1130	1180	1230
	Mass (kg)	4.7	5.0	5.3	5.6	5.9	6.2	6.6	6.9	7.2	7.5	7.8	8.1	8.4	8.7	9.0	9.3	9.7	10.0	10.3

Selections

Part Number Type	Lead (mm)	Controllers (1) Specifications / Power Supply: Absolute encoders (with Data Storage Battery)	Incremental Type	I/O Module	W/ or w/o Noise Filter (2)	Cable Standard	Flexible	Stroke (mm)
RSH3C	05	AC100~115V	C21A	NPN: N	Without: F0	3.5m: 3	3.5m: R3	150~1050 (50mm Increment)
	10	AC200~230V	C22A	PNP: P	With: F1	5m: 5	5m: R5	
	20		C22B	CC-Link: C	Specifications P.396	10m: 10	10m: R10	
				DeviceNet: D				

(1) Controllers are shipped with preset parameters for each type. Data storage batteries are outside the scope of RoHS Directive.
(2) This product needs a noise filter. When purchased separately by customers, please select "none". Be sure to install a surge absorber on the primary side of a noise filter. For details, please see the Instruction Manual.

Order Example

Part Number	Controller	I/O Module	W/ or w/o Nose Filter	Cable	Stroke
RSH3C05	C22A	N	F1	3	400

Days to Ship

Price

Actuator Price

Part Number	Unit Price 1 ~ 5 unit(s) Stroke (mm) 150/200	250/300	350/400	450/500	550/600	650/700	750/800	850/900	950/1000	1050
RSH3C__										

For larger quantity orders "Days to Ship" may differ from published catalog term. P.87

Controller Price

Types / I/O	Unit Price 1 ~ 5 unit(s) C21A/C22A Absolute Encoders (with Data Storage Battery)	C21B/C22B Incremental Type
N		
P		
C		
D		

Cable Price

Cable (Standard)	Unit Price 1 ~ 5 pc(s).	Cable (Flexible)	Unit Price 1 ~ 5 pc(s).
3		R3	
5		R5	
10		R10	

Noise Filter Price

W/ or w/o Noise Filter	Unit Price 1 ~ 5 unit(s)
Without: F0	
With: F1	

Note

A power interruption circuit is not installed in this controller.
Please be sure to build an external power interruption circuit and form an emergency stop circuit. Circuit Examples P.394

Allowable Overhang Load

- Horizontal Use

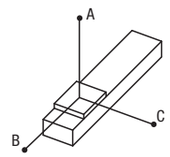

- Wall Mount Use

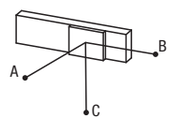

mm

Lead	Mass	A	B	C
05	80kg	594	20	17
	60kg	707	34	29
	40kg	844	63	54
	20kg	1087	148	127
10	60kg	375	30	25
	40kg	472	57	47
	20kg	622	137	111
20	30kg	338	76	57
	20kg	401	125	92
	10kg	687	274	200

mm

Lead	Mass	A	B	C
05	80kg	0	0	0
	60kg	0	0	0
	40kg	15	18	505
	20kg	89	104	974
10	60kg	0	0	0
	40kg	8	11	196
	20kg	74	90	517
20	30kg	20	27	182
	20kg	56	76	302
	10kg	163	225	617

When overhang equals zero, use linear guides with selected unit to support workload.

Allowable Static Moment

- Moment Diagram

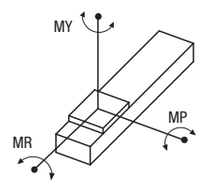

N·m

MY	MP	MR
128	163	143

Max. Velocity (mm/s)

Type	Lead (mm)	Stroke (mm) 150-600	650	700	750	800	850	900	950	1000	1050
RSH3C	05	300	264	225	195	180	165	150	135	120	105
	10	600	528	450	390	360	330	300	270	240	210
	20	1000	1000	900	800	700	650	600	550	500	450

Alterations

Part Number	Controller Types	I/O Types	Noise Filter W/ or w/o	Cable	Stroke	(E, H, etc.)
RSH3C05	C22A	N	F1	3	400	E-H

Alterations	Change of Home Position	Handy Terminal	Handy Terminal w/ Deadman's Switch	Support Software W/ USB Communication Cable	Support Software W/ RS232C Communication Cable	I/O Cable	Actuator Instruction Manual	Controller Instruction Manual
Code	E	H	D	S	R	T	MJ/ME	KJ/KE
Spec.	The home position is relocated to the opposite side of the motor.	Handy Terminal is included. Specifications P.359, 395	Handy Terminal w/ Deadman's Switch is included. Specifications P.359, 395	Support Software USB w/ communication cable is included. Specifications P.359, 395	Support Software w/ RS232C communication cable is included. Specifications P.395	I/O cable is included. Required for NPN / PNP configurations. Specifications P.360, 395	For Actuator main structures. Instruction Manual is included. MJ: Japanese Language ME: English Language	For Controllers Instruction Manual is included. KJ: Japanese Language KE: English Language
Price Adder								

See P.395 for Optional Items