CMGW

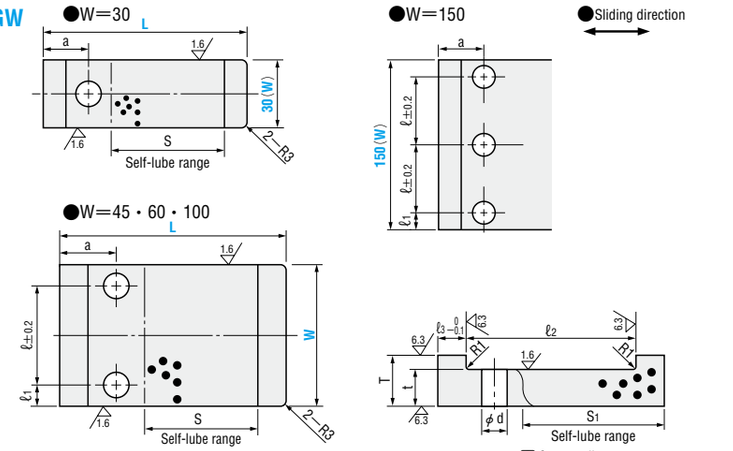

ℓ	ℓ1	ℓ2	ℓ3	a	d	S	S1	W		t	T	Catalog No.	W	L
—	—	50	10	20	11	30	40	30	0 −0.021	12	17	CMGW	30	70
		70				50	60							90
22	11.5	50				30	40	45	0 −0.025	15	25		45	70
		70				50	60							90
30	15	80	20	40	13	40	60	60	0 −0.030	25	35		60	120
		100				60	80							140
		120				80	100							160
70		80			18	40	60	100	0 −0.035				100	120
		100				60	80							140
		120				80	100							160
60		80				40	60	150	0 −0.040				150	120
		100				60	80							140
		120				80	100							160
		140				100	120							180

Order

Catalog No.	W	—	L
CMGW	30	—	90

Days to Ship: Quotation

Price: Quotation

CMGBW

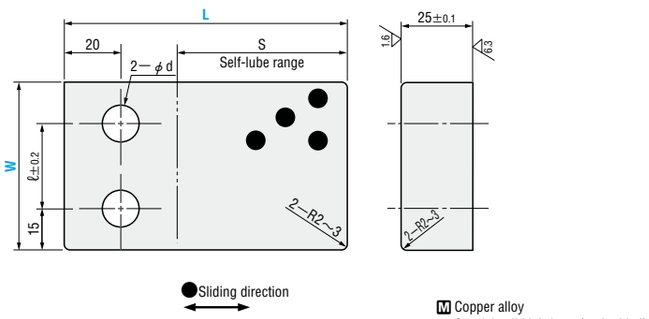

S	ℓ	d	Catalog No.	W	L
40	30	13	CMGBW	60	80
60					100
80					120
40	70	18		100	80
60					100
80					120
40	120			150	80
60					100
80					120

Order

Catalog No.	W	—	L
CMGBW	60	—	100

Days to Ship: Quotation

Price: Quotation

CMGCW

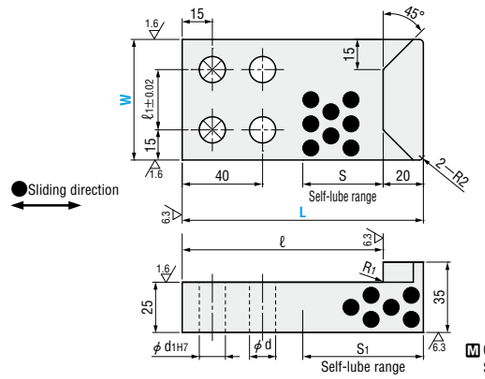

ℓ	ℓ1	S	S1	d	d1	W		Catalog No.	W	L
100	30	40	60	13	13	60	0 −0.030	CMGCW	60	120
120		60	80							140
140		80	100							160
100	70	40	60	18	16	100	0 −0.035		100	120
120		60	80							140
140		80	100							160
100	120	40	60			150	0 −0.040		150	120
120		60	80							140
140		80	100							160

Order

Catalog No.	W	—	L
CMGCW	60	—	120

Days to Ship: Quotation

Price: Quotation

CMGDW

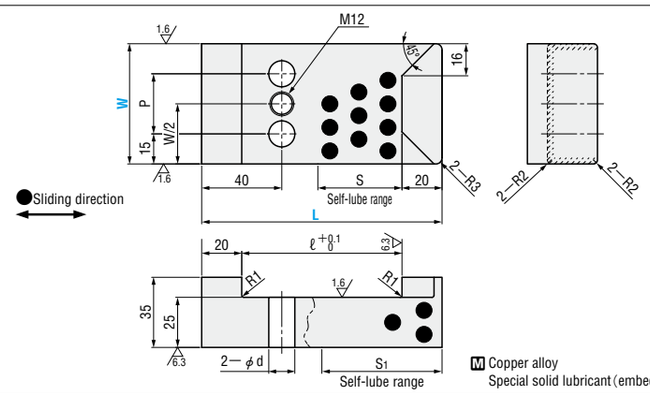

ℓ	S	S1	Mounting screw	P	d	W		Catalog No.	W	L
80	40	60	M12×50	30	13	60	0 −0.030	CMGDW	60	120
100	60	80								140
120	80	100								160
80	40	60	M16×55	70	18	100	0 −0.035		100	120
100	60	80								140
120	80	100								160

Order

Catalog No.	W	—	L
CMGDW	60	—	120

Days to Ship: Quotation

Price: Quotation

Example

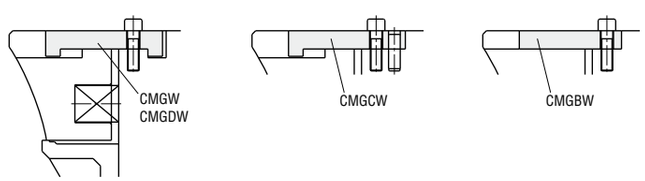

CAM UNITS & COMPONENTS