MINI SLIDE CORE UNITS (SLIDE STROKE AMOUNT 6mm)

—SLIM TYPE WITH SLIDE CORE RETRACTING MECHANISM—

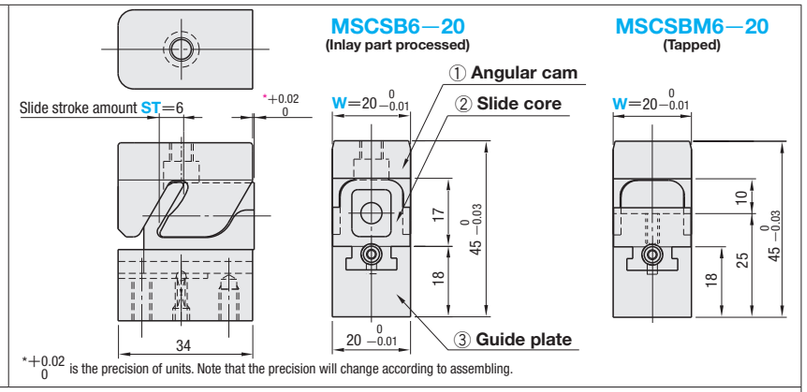

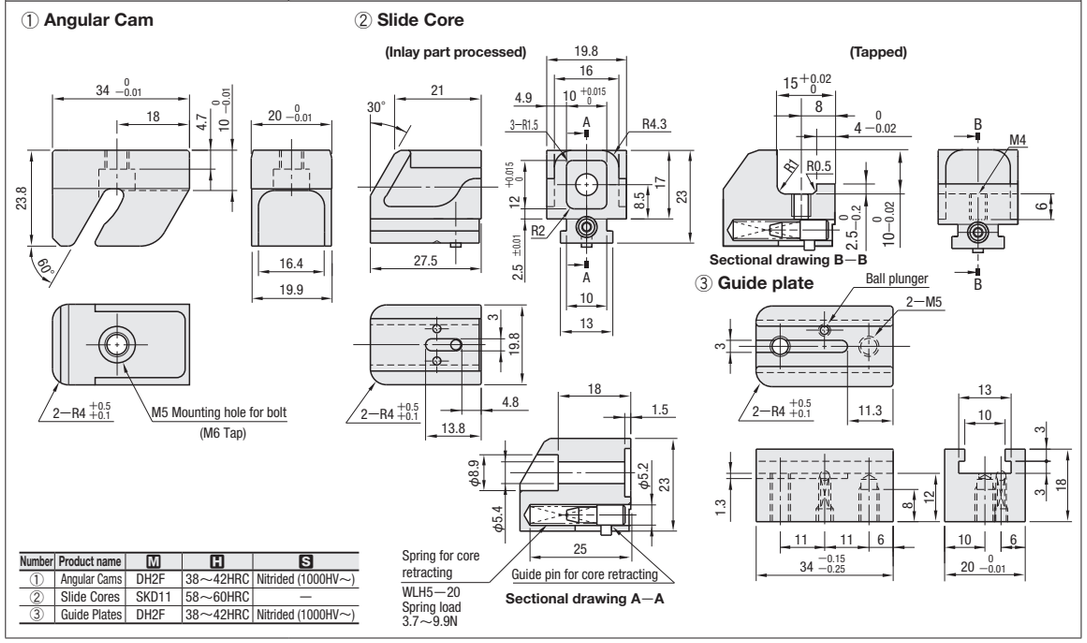

Number	Product name	M	H	S
①	Angular Cams	DH2F	38～42HRC	Nitrided (1000HV～)
②	Slide Cores	SKD11	58～60HRC	—
③	Guide Plates	DH2F	38～42HRC	Nitrided (1000HV～)

Part Number		W
Type	ST	
MSCSB (Inlay part processed)	6	20
MSCSBM (Tapped)		

■Components (Single Items) (Be sure to carry out installation adjustment before use.)

Components	Part Number		W
	Type	ST	
①Angular Cams	MSCC	6	20

Order

Part Number			W
Type	ST		
MSCSB	6	—	20
MSCC	6	—	20

Days to Ship: Quotation

Price: Quotation

■Characteristics

①Equipped with slide core retracting mechanism
- Built-in spring unit into the slide core enables to move safely even to the direction of gravitational force. Moreover, easy to adjust the core part because the slide cores can be easily detached and attached.

②Space saving
- Saves installation space by 50% compared to MSCN□ and MSCK□ due to the structural change of the guiding method.

③With slide core lock mechanism
- Ball plunger leads to stable operation of the slide core.

④Installation method can be selected between the two installation methods for core section.

⑤Total cost reduction
- Simple structure and low-cost.
- The angular cam, slide core and guide plate come in a set, which does not require oblique hole boring, resulting in process cost savings. (Please procure the core part via in-house production.)
- Eliminates the complex calculation such as the slide stroke, etc.

■Notes
- This product is developed for injection molding die. Do not use for other purposes.
- Be sure to apply grease to the sliding surface to prevent it from burning.

■Mounting dimensions P.640

MINI SLIDE CORE UNITS (SLIDE STROKE AMOUNT 10mm)

—SLIM TYPE WITH SLIDE CORE RETRACTING MECHANISM—

Non JIS material definition is listed on P.1351 - 1352

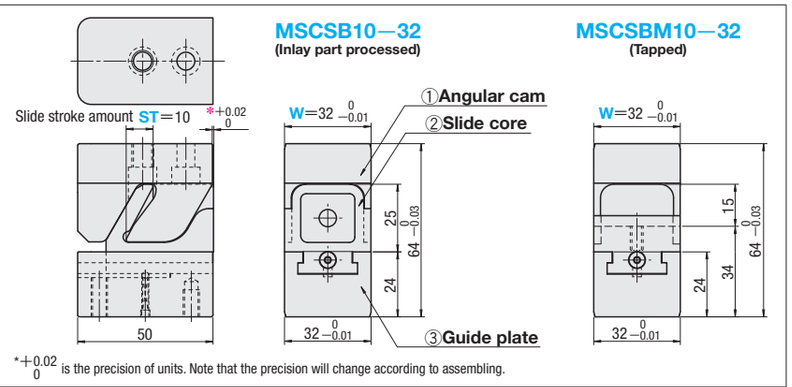

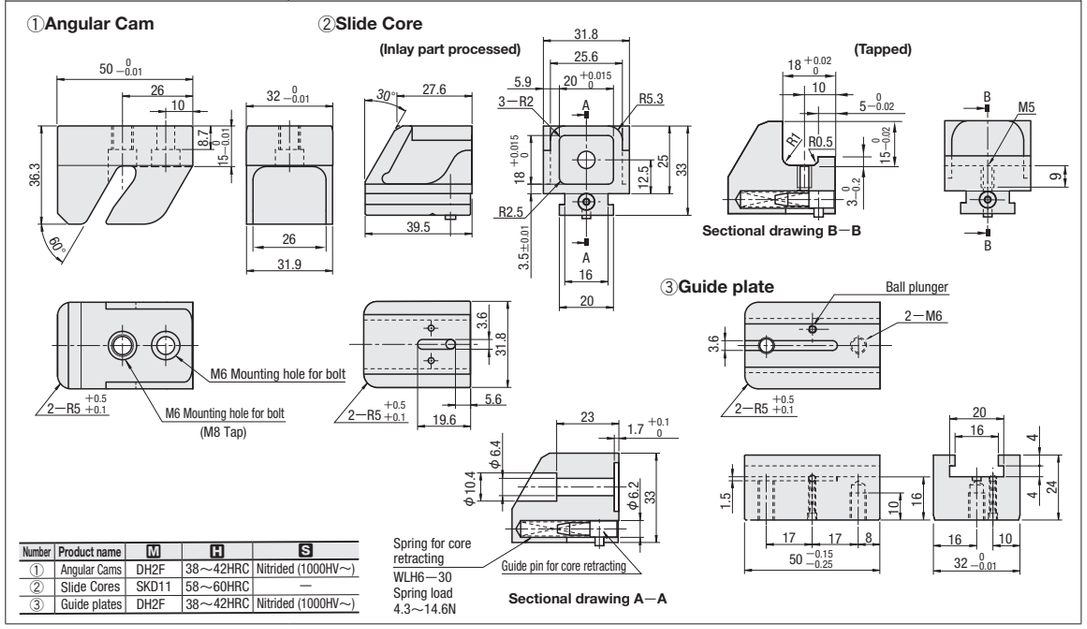

Number	Product name	M	H	S
①	Angular Cams	DH2F	38～42HRC	Nitrided (1000HV～)
②	Slide Cores	SKD11	58～60HRC	—
③	Guide plates	DH2F	38～42HRC	Nitrided (1000HV～)

Part Number		W
Type	ST	
MSCSB (Inlay part processed)	10	32
MSCSBM (Tapped)		

■Components (Single Items) (Be sure to carry out installation adjustment before use.)

Components	Part Number		W
	Type	ST	
①Angular Cams	MSCC	10S	32

Order

Part Number			W
Type	ST		
MSCSB	10	—	32
MSCC	10S	—	32

Alterations

Part Number	—	W	—	SPC
MSCSBM10	—	32	—	SPC

Alteration	Code	Spec.	1Code
Strengthening of core retracting spring	SPC	Alterations on spring (WLH→SWC) and core retracting guide pins Spring: WLH6—30 ⇨ SWC6—30 Load (N) min.: 4.3 ⇨ 7.7 Load (N) max.: 14.6 ⇨ 26.3	Quotation

Days to Ship: Quotation

Price: Quotation

■Mounting dimensions

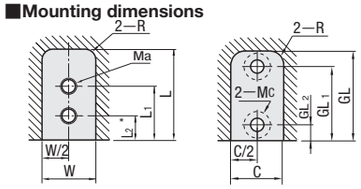

*L2 dimension is only applicable to ST=10.

ST	W	Fixed side					Movable side					
		L	L1	L2	Ma	R	C	GL	GL1	GL2	MC	R
6	20	34	18	—	M5	4	20	34	28	6	For M5	4
10	32	50	26	10	M6	5	32	50	42	8	For M6	5

Mc is the counterbore for bolts from the reverse side.