MINI SLIDE CORE UNITS (SLIDE STROKE AMOUNT 3mm)

—SLIM TYPE—

RoHS

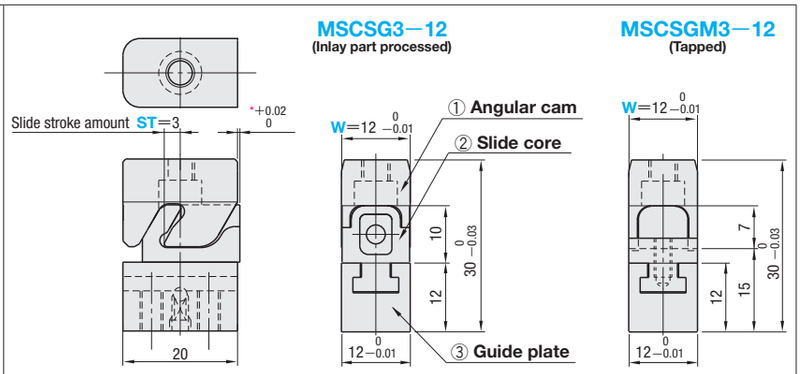

*$^{+0.02}_{0}$ is the precision of units. Note that the precision will change according to assembling.

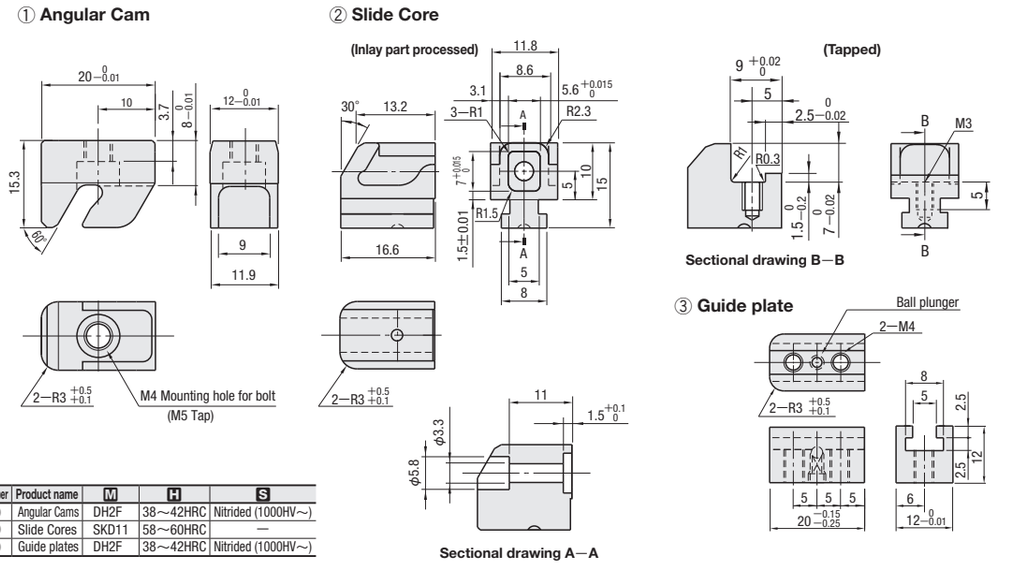

Number	Product name	M	H	S
①	Angular Cams	DH2F	38～42HRC	Nitrided (1000HV～)
②	Slide Cores	SKD11	58～60HRC	—
③	Guide plates	DH2F	38～42HRC	Nitrided (1000HV～)

Part Number		W
Type	ST	
MSCSG (Inlay part processed)	3	12
MSCSGM (Tapped)		

■Components (Single Items) (Be sure to carry out installation adjustment before use.)

Components	Part Number		W
	Type	ST	
①Angular cams	MSCC	3	12

Order

Part Number			W
Type	ST		
MSCSG	3	—	12
MSCC	3	—	12

Days to Ship: Quotation

Price: Quotation

■Characteristics

①Space saving

- Saves installation space by 50% compared to MSCN□ and MSCK□ due to the structural change of the guiding method.

②With slide core lock mechanism

- Ball plunger leads to stable operation of the slide core.

③Installation method can be selected between the two installation methods for core section.

④Total cost reduction

- Simple structure and low-cost.
- The angular cam, slide core and guide plate come in a set, which does not require oblique hole boring, resulting in process cost savings. (Please procure the core part via in-house production.)
- Eliminates the complex calculation such as the slide stroke, etc.

■Notes

- This product is developed for injection molding die. Do not use for other purposes.
- Be sure to apply grease to the sliding surface to prevent it from burning.

■Mounting dimensions P.638

MINI SLIDE CORE UNITS (SLIDE STROKE AMOUNT 3mm)

—SLIM TYPE WITH SLIDE CORE RETRACTING MECHANISM—

Non JIS material definition is listed on P.1351 - 1352

RoHS

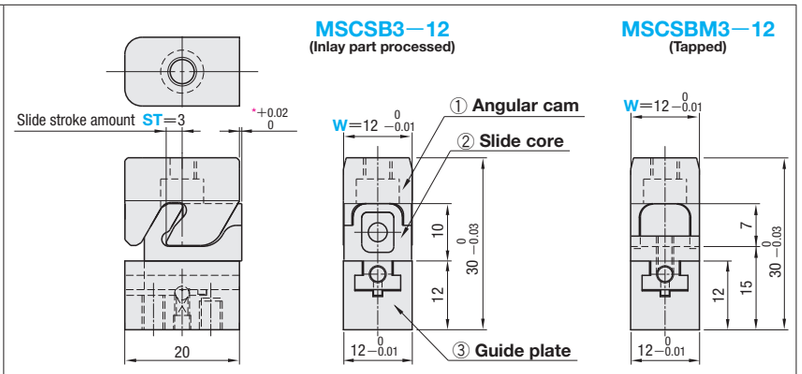

*$^{+0.02}_{0}$ is the precision of units. Note that the precision will change according to assembling.

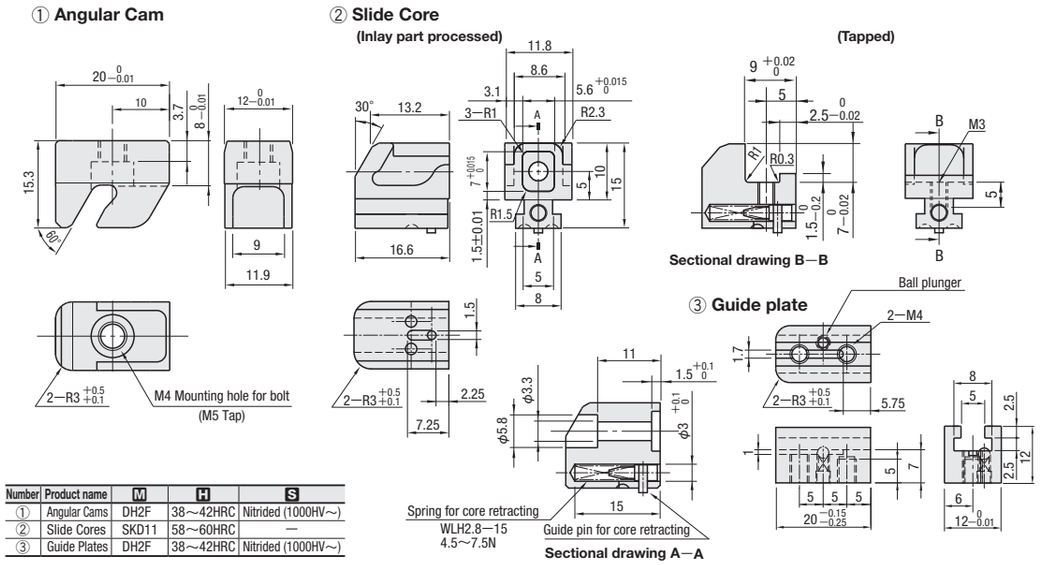

Number	Product name	M	H	S
①	Angular Cams	DH2F	38～42HRC	Nitrided (1000HV～)
②	Slide Cores	SKD11	58～60HRC	—
③	Guide Plates	DH2F	38～42HRC	Nitrided (1000HV～)

Part Number		W
Type	ST	
MSCSB (Inlay part processed)	3	12
MSCSBM (Tapped)		

■Components (Single Items) (Be sure to carry out installation adjustment before use.)

Components	Part Number		W
	Type	ST	
①Angular Cams	MSCC	3	12

Order

Part Number			W
Type	ST		
MSCSB	3	—	12
MSCC	3	—	12

Days to Ship: Quotation

Price: Quotation

■Characteristics

This product is MSCSG3—12, MSCSGM3—12 with side core retracting mechanism.

Built-in spring unit into the slide core enables to move safely even to the direction of gravitational force. Moreover, easy to adjust the core part because the slide cores can be easily detached and attached.

■Notes

- This product is developed for injection molding die. Do not use for other purposes.
- Be sure to apply grease to the sliding surface to prevent it from burning.

■Mounting dimensions

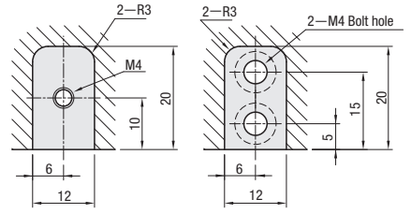

—Angular cam side— —Slide core side—