Anchors for Aluminum Extrusions

Heavy / Standard

Anchors for Aluminum Extrusions – Heavy Type

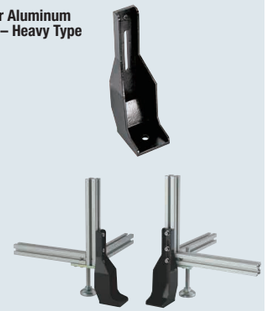

This is sold as single Anchor.

HFHANK8 Heavy Type

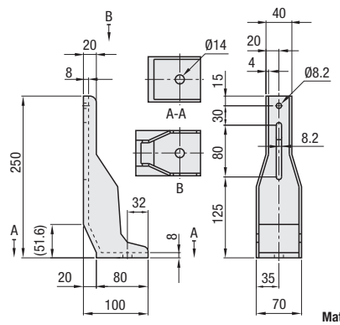

To use in combination with HFS8-4040.

Material: 1045 Carbon Steel or Equivalent
Surface Treatment: Black Baked Paint

Part Number	Mass g	Extrusions (Series)	Screws / Nuts			
			Screws	Quantity	Nuts	Quantity
HFHANK8	1650	HFS8 HFS8-45	CBM8-20	2	HNTT8-8	2

Screws and nuts are not included.

Part Number Example

Part Number
HFHANK8

Part Number Alterations

Part Number	-	(SET)
HFHANK8	-	SET

Alteration	Code	Spec.	Extrusions (Series)
Applicable Screw / Nut Set	SET	Set of screws and nuts for mounting the anchor to an aluminum extrusion. Anchor bolts are not included.	HFS6 HFS8-45

When –SET is specified, the product is not RoHS compliant.

Application Example

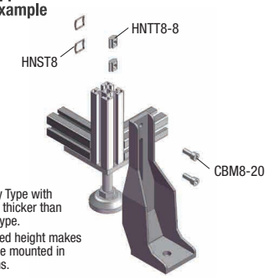

Features

This is a Heavy Type with reinforced ribs thicker than the Standard Type.

25mm increased height makes it possible to be mounted in higher positions.

Anchors for Aluminum Extrusions – Standard Type

This is sold as single Anchor.

HFANK225 Standard Type

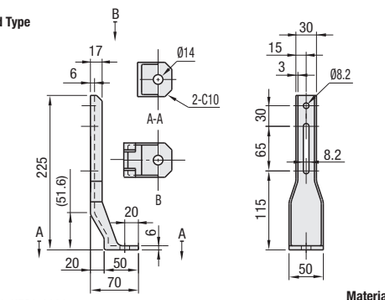

To use in combination with HFS8-3030.

Material: 1045 Carbon Steel or Equivalent
Surface Treatment: Black Baked Paint

Part Number	Mass g	Extrusions (Series)	Screws / Nuts			
			Screws	Quantity	Nuts	Quantity
HFANK225	577	HFS6	CBM6-14	3	HNTT6-6	3
		HFS8 HFS8-45	CBM8-18	2	HNTT8-8	2

Screws and nuts are not included.
When mounting to HFS6 series, washers are required.

Part Number Example

Part Number
HFANK225

Part Number Alterations

Part Number	-	(SET1 / SET2)
HFANK225	-	SET1

Alteration	Code	Spec.	Extrusions (Series)
Applicable Screw / Nut Set	SET1	Set of screws and nuts for mounting the anchor to an aluminum extrusion. Anchor bolts are not included.	HFS6
	SET2		HFS8 HFS8-45

* When SET1 is selected, three washers (WSSM12–6–1) are included.
When specifying SET1 and SET 2, the products are not RoHS–compliant.

Application Example

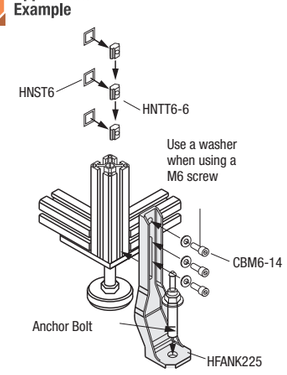

Anchor Stands

For Aluminum Extrusions

Anchors Stands for Aluminum Extrusions

Type	Material	Surface Treatment
HFLANK	1018 Carbon Steel or Equivalent	Trivalent Chromate
HFLANB		Black Oxide

HFLANK6-3030 HFLANB6-3030

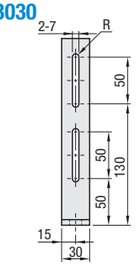

HFLANK6-3060 HFLANB6-3060

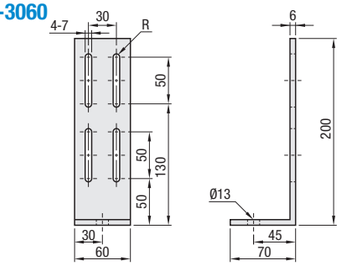

HFLANK8-4040 HFLANB8-4040

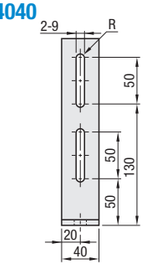

HFLANK8-4080 HFLANB8-4080

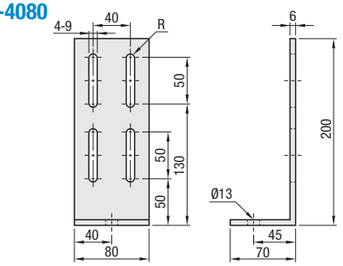

Part Number		Extrusions (Series)	Mass g	Screws / Nuts			
				Screws	Quantity	Nuts	Quantity
HFLANK6	3030	HFS6-3030	380	CBM6-14	2	HNTP6-6	2
HFLANB6	3060	HFS6-3030* / HFS6-3060	750		4		4
HFLANK8	4040	HFS8-4040	500	CBM6-18	2	HNTP8-8	2
HFLANB8	4080	HFS8-4040* / HFS8-4080	1000		4		4

*When erecting two aluminum extrusions, reinforce the extrusions with sheet metal plates (Refer to the example below).
Applicable screws or nuts are not included.

Part Number Example

Part Number
HFLANK6-3060

Part Number Alterations

Part Number	-	(SET)
HFLANK6-3030	-	SET

Alteration	Code	Spec.	Stand	
Applicable Screw / Nut Set	SET	Bolts and Nuts for mounting to be included as sets. Anchor bolts are not included. Screw → CBM Nut → HNTP	HFLANK HFLANB	6-3030
				6-3060
				8-4040
				8-4080

When SET is specified, product is not RoHS compliant.

Application Example

Example of 1 Slot Extrusion

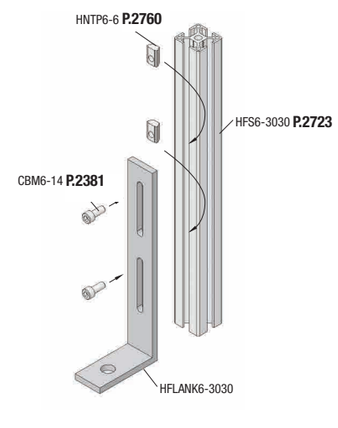

Example of 2 Slot Extrusion

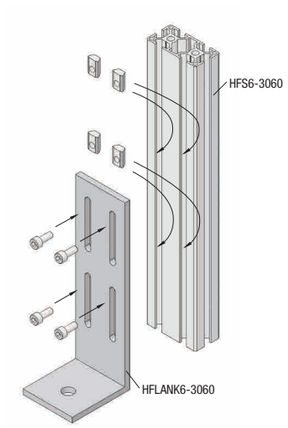

Example of 1 Slot Extrusion x 2
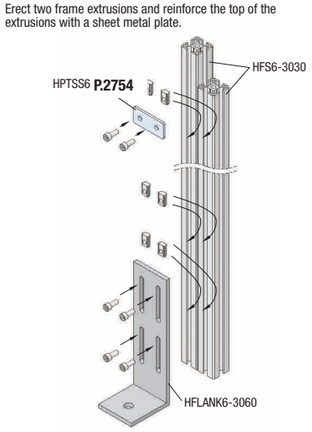
Erect two frame extrusions and reinforce the top of the extrusions with a sheet metal plate.