Simplified Adjustments (Z Axis Medium Load Capacity)

For Frequent Setups / For Infrequent Setups

Simplified Adjustments (Z Axis Medium Load Capacity) – For Set-Up Change

RoHS10

XKDSP40

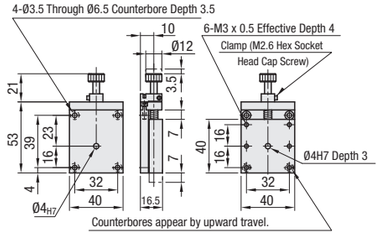

XKDSP60

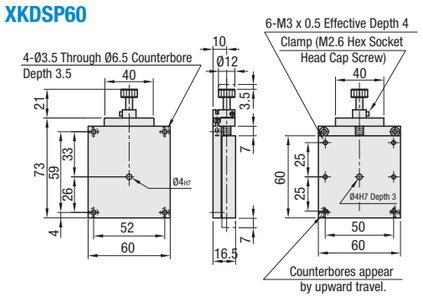

Material: Aluminum Alloy
Surface Treatment: Black Anodize
Accessories: Hex Socket Head Cap Screw CB3-10, 4 pcs.

Part Number		Stage (mm)	Travel Distance (mm)	Load Capacity (N)	Weight (g)
Type	No.				
XKDSP	40	40 x 40	±6	19.6	100
	60	60 x 60		39.2	190

Travel per Rotation: 1.5mm Minimum Graduation: 0.5 mm
The allowable loads are for using in Z-Axis configuration (in the orientation shown in the photo).

Accuracy Standards

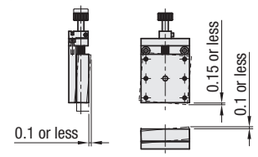

Not recommended for precise positioning due to its clearance shown on the left.

Part Number Example

Part Number
XKDSP60

Simplified Adjustments (Z Axis Medium Load Capacity) – For First Time Installment

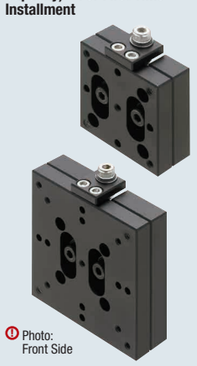

Photo: Front Side

RoHS10

XKEMA40

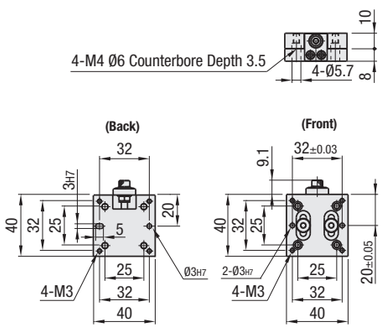

XKEMA60

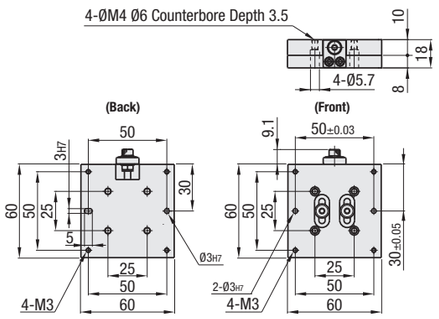

Can be tightened from the front with M3 hex socket head cap screws and from back with M4.

Material: 5052 Aluminum Alloy
Surface Treatment: Black Anodize
Accessories: Included Dowel Pin: MS3-10 x 2 Pcs.
Hex Socket Head Cap Screw: CB3-10 x 4 pcs.

Part Number		Stage Surface (mm)	Travel Distance (mm)	Load Capacity (N)	Weight (g)
Type	No.				
XKEMA	40	40 x 40	±3	49	70
	60	60 x 60	±5	98	160

The allowable loads are for using in Z-Axis configuration (in the orientation shown in the photo).

Part Number Example

Part Number
XKEMA40

Accuracy Standards

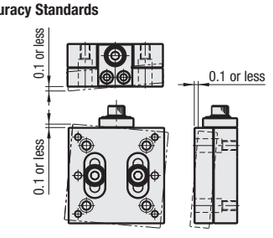

Not recommended for precise positioning due to its clearance shown on the left.
Values are obtained before shipping.

Simplified Adjustments (XY Axes Feed Screw)

Standard Type – Standard & Large Handle

Simplified Adjustments (XY Axes Feed Screw) – Standard Type

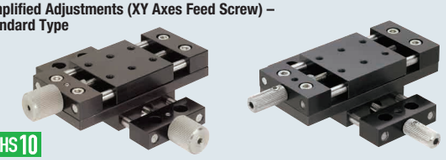

RoHS10

Accuracy Standards

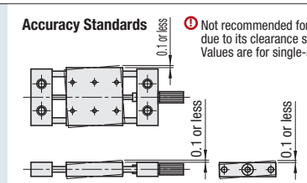

Not recommended for precise positioning due to its clearance shown on the left. Values are for single-axis configuration.

Application Example

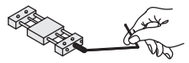

Long stroke moves can be made easy with use of a ball-point hex wrench.

Type		Main Body		Shaft	Knob	Feed Screw	Accessories
Standard Handle	Large Handle	Material	Surface Treatment	Material	Material	Material	
XYKNEJ	XYKJL	Aluminum Alloy	Black Anodize	304 Stainless Steel	303 Stainless Steel	304 Stainless Steel	No. 20: CBSST3-12, 4 pcs. No. 25: SCB3-10, 4 pcs. No. 40, 60: SCB4-10, 4 pcs.

Handle Shape Comparisons

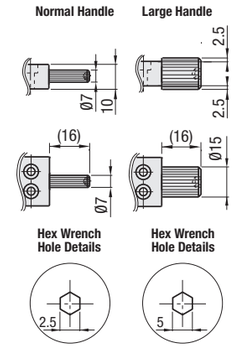

When the large handle is selected, the handle diameter will exceed the end plate height. Please be aware of potential interferences.
Travel Per Rotation: 0.7 mm

No. 20

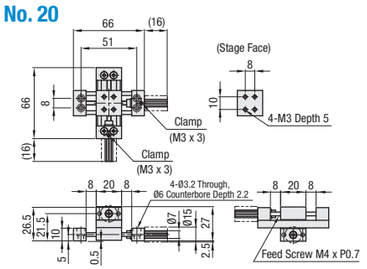

No. 25

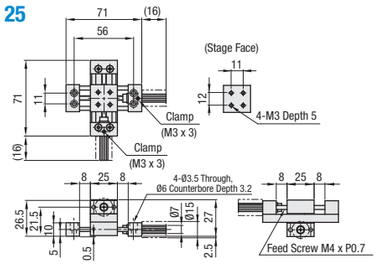

No. 40

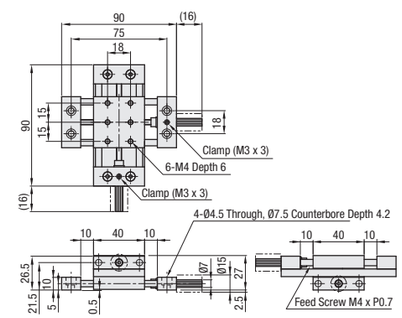

No. 60

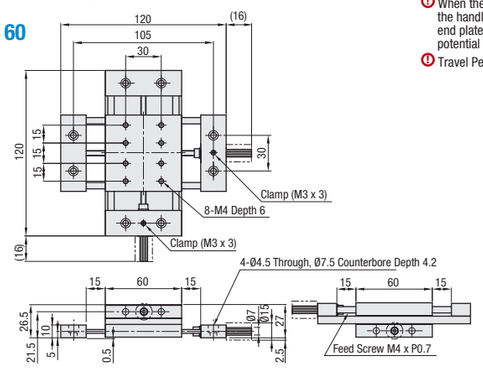

Do not force the handwheel to turn past the end of the travel limits as it may cause the handwheel to come loose.

Part Number			Stage Surface (mm)	Travel Distance (mm)	Load Capacity (N)	Weight (kg)
Type	No.	Large Handle Selected				
Standard Handle XYKNEJ	20	Large Handle Top & Bottom L	20 x 20	±7	18.6	0.10
	25		25 x 25			0.13
Large Handle XYKJL	40	Large Handle Top Only A	40 x 40	±9	36.2	0.27
	60	Large Handle Bottom Only B	60 x 60	±13	36.2	0.48

Travel per Rotation: 0.7mm

Part Number Example

Part Number
XYKNEJ40
XYKJL60L

Part Number Alterations

Part Number	-	(MMR)	-	(CLC)
XYKNEJ20	-	MMR		
XYKJL40A			-	CLC
XYKNEJ60	-	MMR	-	CLC

Alterations	Mounting of a Scaled Plate on the Stage	Change of Clamp (Knurled Knob)
Code	MMR	CLC
Spec.	Mounts a scaled plate to the stage. Minimum Graduation: 0.5 mm The accessory screws will be changed as shown on the below right.	Changes Clamp Screw to Knurled Knob Changes are for both X and Y axes.

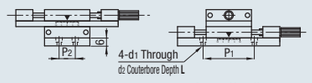

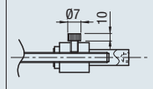

Large Handle

MMR alteration will change the mounting hole pitch since a plate is attached to the stage

No.	P_1	P_2	d_1	d_2	ℓ
20	26	8	2.5	4.3	4
25	31	11	3.5	6.0	3.5
40	50	18	4.5	7.5	3
60	75	30	4.5	7.5	3

Accessories (4 Pcs.):
No. 20: SCB2-5
No. 25: SCB3-6
No. 40: CBSST4-8
No. 60: CBSST4-8