Pin Retainers

Configurable 4 Sidehole

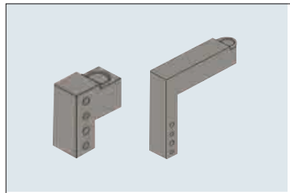

3D CAD is available online.

Type	Material	Finish
APR4S	A-36 Steel	Black Oxide
SAPR4S	304 Stainless Steel	—

Tolerance					
Dim.	Tol.	Finish (Ra)	Geometric		
0.0	±0.3	6.0 µm	▱	Surfaces	0.015 T.I.R
0.00	±0.03	3.0 µm	⊥		
0.000	±0.020	1.6 µm	//		

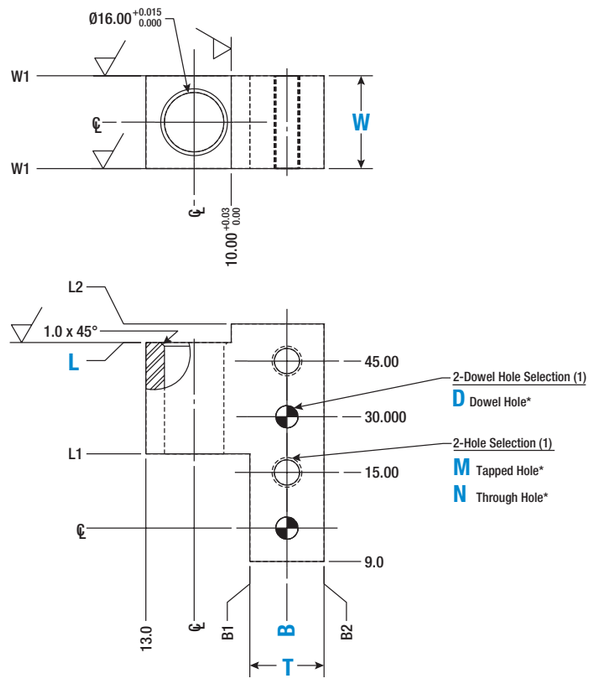

Configurable NAAMS (L-3 Sidehole)												
Part Number		T Thickness	B Length (1 mm inc.)	L Length (1 mm inc.)	Hole Selection			B1 (±0.3)	B2 (±0.3)	L1 (±0.3)	L2 (±0.3)	W1 (±0.3)
Type	(W) Width				N/M Hole Selection	D Dowel Hole	Tolerance					
APR4S SAPR4S	25 30	20 24	25–110 (±0.020)	50–120 (±0.3)	N9	D6F (F7)	+0.010 / +0.022	=B-(T/2)	=B-(T/2)	=L-30	=L+5	=W/2
					N11	D6H (H6)	+0.000 / +0.008					
					M8	D8F (F7)	+0.013 / +0.028					
					M10	D8H (H6)	+0.000 / +0.009					

N – Through Hole, N9 for M8 Screw, N11 for M10 Screw
M – Tapped Hole (Coarse Thread), M8 x 1.25; M10 x 1.5
D – Dowel Hole
D, N & M – Holes are machined to a nominal depth of twice the diameter

Part Number Example

Type	Width	-	T	-	B	-	L	-	Hole (N/M)	-	Dowel (D)	-	Alteration (CH)
APR4S	25	-	T20	-	B37	-	L62	-	N9	-	D8F	-	
APR4S	25	-	T20	-	B37	-	L62	-	N9	-	D8F	-	CH

Application Example

Code	CH
Description	Add 45° Chamfer
Spec	8 (W=25) 10 (W=30)

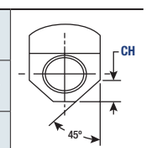

Locating Pins

APS-R Small Head

Type		Coating	Head Shape	Material	Hardness
APS	Standard NAAMS	None – Plain T – TiN	Round	8620 Alloy Steel (JIS SNCM220)	Carburized 58~62 HRC min. (Depth 0.5–0.7 after Grinding)
APSRS	A Configurable	P – Plain T – TiN			

3D CAD is available online.

Tolerance				
Dim.	Tol.	Finish (Ra)	Geometric	
0.0	±0.3	6.0 µm	⊥	0.015 T.I.R to Datum A & B
0.00	±0.03	3.0 µm	//	
0.000	±0.015	1.6 µm	◎	0.03 T.I.R

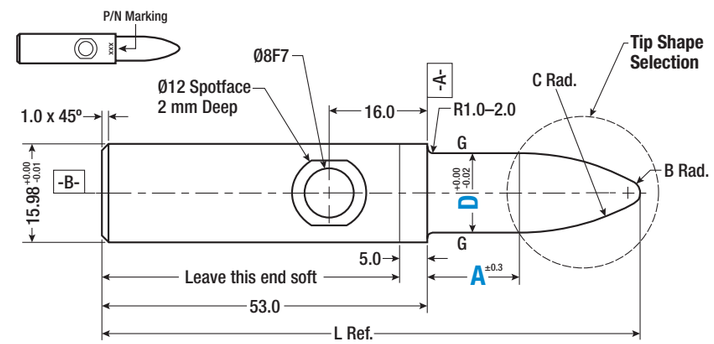

Tip Shape Selection		
A Shape	Bullet	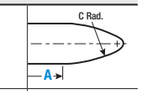
B Shape	Half Bullet	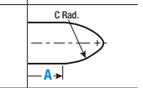
C Shape	Sphere	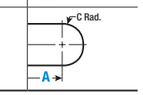

$$L\ ref. = 53 + A + \sqrt{D\left(C - \frac{D}{4}\right)}$$

Standard NAAMS Pins															
Type	D Head Dia. Callout (Actual)	A Lead Length										Retractable	Coating	B Rad	C Rad
		10 mm	15 mm	25 mm	35 mm	45 mm	55 mm	65 mm	75 mm	85 mm	95 mm				
APS	06 (5.85)	1	2	3	4	5	6	—	—	—	—	R – Retractable	None – Plain T – TiN	1.0	18.0
	08 (7.85)	1	2	3	4	5	6	7	8	—	—				24.0
	10 (9.85)	1	2	3	4	5	6	7	8	9	0			2.0	30.0
	13 (12.85)	1	2	3	4	5	6	7	8	9	0				39.0
	16 (15.85)	1	2	3	4	5	6	7	8	9	0				48.0

Standard NAAMS specifications are controlled by the NAAMS organization and the latest version of these products will be produced in compliance to: www.naamsstandards.org.

Configurable NAAMS (A Configurable)								
Type	Coating	Tip Shape	D Head Dia. Callout (Actual)	A Lead Length (1 mm Inc.)	B Rad	C Rad		
						Tip A	Tip B	Tip C
APSRS	P – Plain T – TiN	A	06 (5.85)	5–55	1.0	18.0	9.0	D/2
			08 (7.85)	5–75		24.0	12.0	
		B	10 (9.85)	5–100	2.0	30.0	15.0	
			13 (12.85)			39.0	19.5	
		C	16 (15.85)			48.0	24.0	

Part Number Example

Standard

Part Number	-	D	-	A	-	Retractable	-	Coating
APS	-	08	-	4	-	R	-	T
APS	-	13	-	0	-	R	-	T

Configurable

Part Number	-	Coating	-	Tip Shape	-	D	-	A
APSRS	-	P	-	B	-	8	-	A35
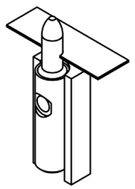
Application Example