Conveyor Drive Section Covers

Conveyor Drive Section Cover A

CVKA4

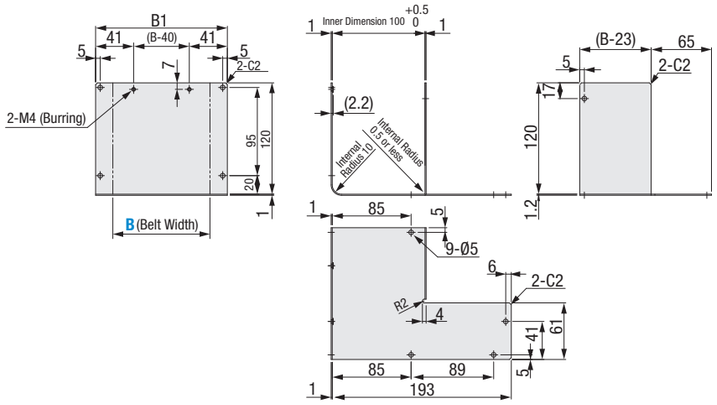

CVKA5

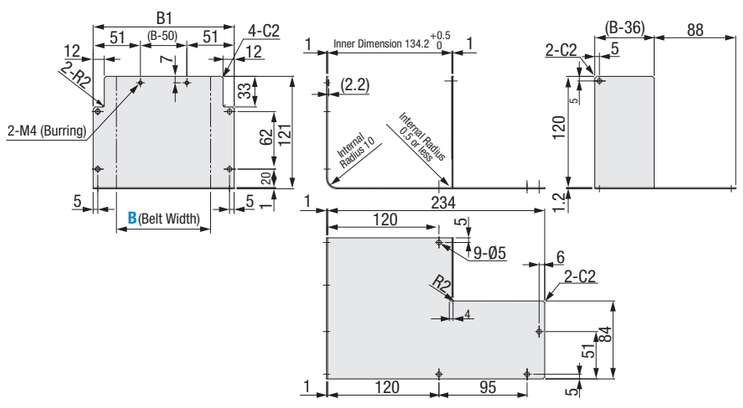

Material: SUS304

Part Number		B (Belt Width)	B_1	Applicable Conveyors
Type	No.	1 mm Increment		
CVKA	4	80–300	B+42	CVGTN
	5		B+52	CVGTP

Part Number Example

Part Number			B
Type	No.	-	
CVKA4		-	200

Conveyor Drive Section Covers

continued

Conveyor Drive Section Cover B

CVKB4

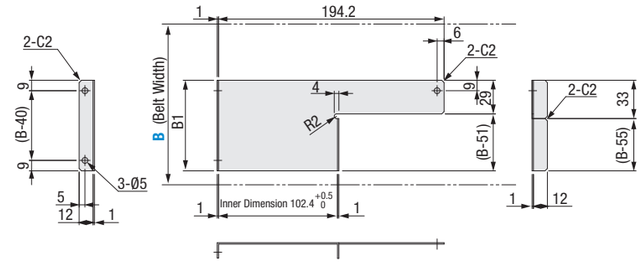

CVKB5

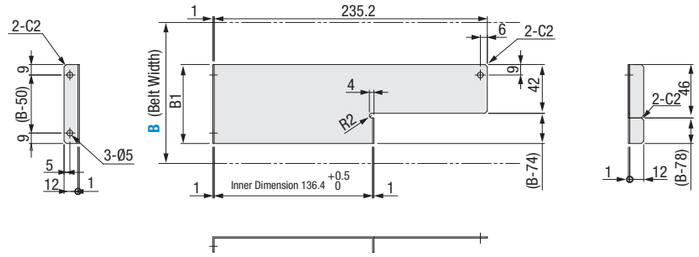

Material: SUS304

Part Number		B (Belt Width)	B_1	Applicable Conveyors
Type	No.	1 mm Increment		
CVKB	4	80–300	B-22	CVGTN
	5		B-32	CVGTP

Part Number Example

Part Number			B
Type	No.	-	
CVKB4		-	150