High Precision Dovetail Slide, Feed Screw

Square / Extended Knob (Lead 4.2mm)

Other Information about Stages
Stage Selection Table P.1639, P.1640
New Products P.1641
About Standard Stages P.1642
Overview, Technical Information P.1643, P.1644

Feature: Low profile (18mm height/axis) Dovetail Slide Stages with smooth 4.2mm lead feeding. ZSCL will be discontinued in March 2013.

Z Axis, Square
(Lead 4.2mm)

X-Axis P.1672
XY-Axis P.1692

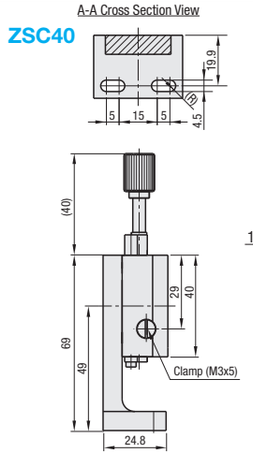

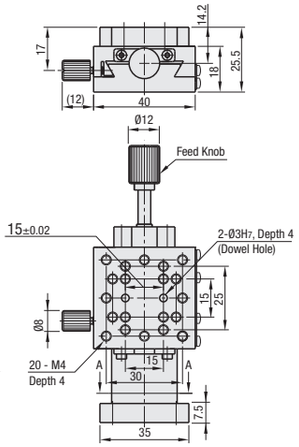

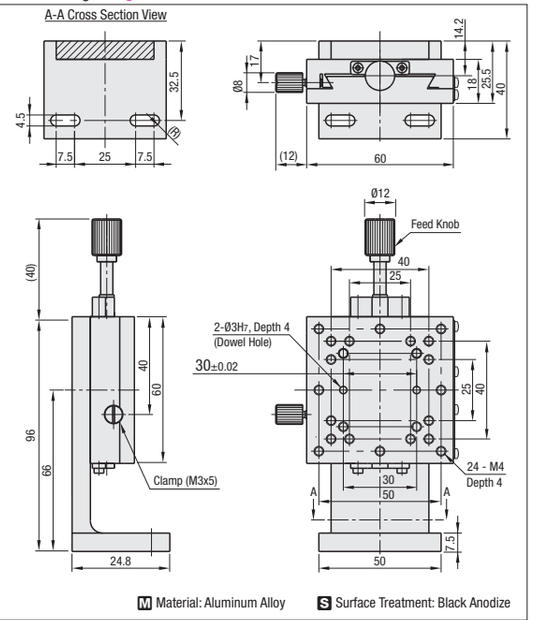

M Material: Aluminum Alloy S Surface Treatment: Black Anodize

Feature: ZSC knob can be extended. Effective when feed knobs are difficult to turn when carriage mounted objects interfere, or when the knobs are hard to reach since the stage is deeply embedded inside a machine.

Z Axis, Extended Knob
(Lead 4.2mm)

RoHS10

X-Axis P.1672
XY-Axis P.1692

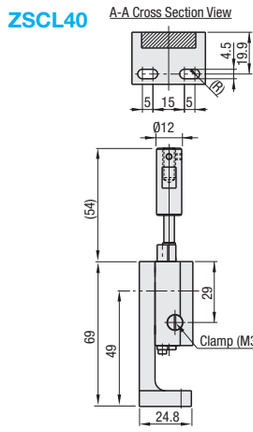

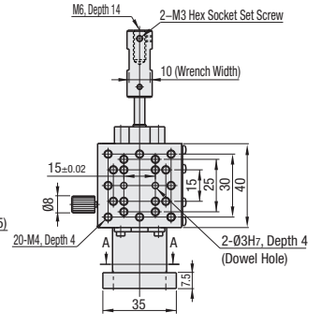

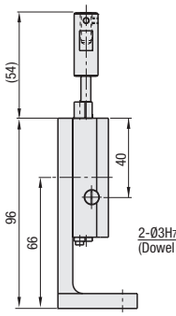

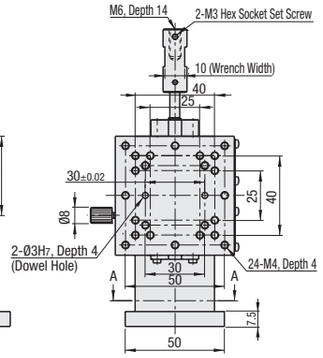

M Material: (Main Body) Aluminum Alloy
(Feed Knob) Low Cadmium Brass
S Surface Treatment: Black Anodize

Part Number Type	No.	Stage Surface (mm)	Travel Distance (mm)	Travel per Knob Rotation (mm)	Load Capacity (N)	Travel Accuracy (µm) Straightness	Weight (kg)	Accessories (2 pcs.) Type M-L	Unit Price 1~4 pc(s).
ZSC	40	40x40	±11	4.2	9.8	20	0.16	CBST4-12	
	60	60x60	±21		14.7	30	0.31	CBST4-12	
ZSCL	40	40x40	±11		9.8	30	0.15	SCB4-14	
	60	60x60	±21		14.7		0.28	SCB4-14	

Resolution (Vernier Scale Indication): 0.1mm/division
Extension Cover HDEXT12 (Sold Separately): Ø12 feed screw knob can be extended. P.1683
XY-Axis Mounting Plate XPLTE: Use this plate when connecting stages with non-matching mounting holes. P.1663

For orders larger than indicated quantity, please request a quotation.

Ordering Example — Part Number ZSC40
Days to Ship
Configure Online
Alterations — Part Number ZSC40 - (R) - R

Alteration	Knob Position Change (Left / Right Reversed)
Spec.	ZSC_ _-R 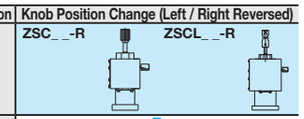 ZSCL_ _-R
Code	R
Price Adder	

Tips: Knob Extension Method

Knob length and diameter can be increased by utilizing the M6, Depth 14 tapped hole.
(Ex.) Seven Lobed Knob (2-P.1089) NKSM6-30 can be mounted to extend the knob by 36mm.
Use an adhesive to retain the cover to the knob.

High Precision Dovetail Slide, Feed Screw

Rectangular / Reinforced Clamp / Low Profile (Lead 4.2mm)

Other Information about Stages
Stage Selection Table P.1639, P.1640
New Products P.1641
About Standard Stages P.1642
Overview, Technical Information P.1643, P.1644

Feature: Dovetail Slide Stages with smooth 4.2mm lead feed screw. Left / Right Reversed configuration is also available.

Z Axis, Rectangular
(Lead 4.2mm)

X-Axis P.1673
XY-Axis P.1691

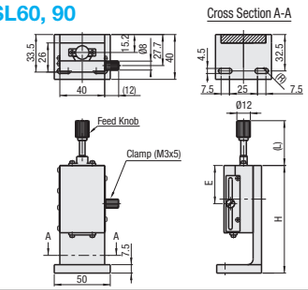

· Upper Mounting Hole Dimensions

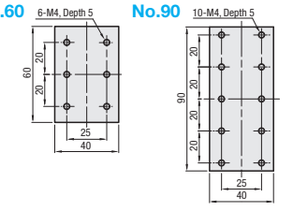

M Material: Aluminum Alloy
S Surface Treatment: Black Anodize

Part Number Type	No.	Stage Surface (mm)	Travel Distance (mm)	Travel per Knob Rotation (mm)	H	(L)	E	Load Capacity (N)	Travel Accuracy (µm) Straightness	Weight (kg)	Accessories (2 pcs.) Type M-L	Unit Price 1~9 pc(s).
ZSL	60	60x40	±21	4.2	96	40	26	19.6	30	0.33	CBST4-12	
	90	90x40	±35		140	60	41			0.45		

Resolution (Vernier Scale Indication): 0.1mm/division
Extension Cover HDEXT12 (Sold Separately): Ø12 feed screw knob can be extended. P.1683
Adjustable Plate XPLT: Utilize when connecting stages with non-matching mounting holes. P.1664

For orders larger than indicated quantity, please request a quotation.

Ordering Example — Part Number ZSL60
Days to Ship
Configure Online
Alterations — Part Number ZSL60 - (R) - R

Alteration	Spec.	Code	Price Adder
Knob Position (Left / Right Reversed)		R	

Feature: The feed knob is clamped directly with a split clamp in order to minimize position drift.

Z Axis, Reinforced Clamp
(Lead 4.2mm)

X-Axis P.1673
XY-Axis P.1691

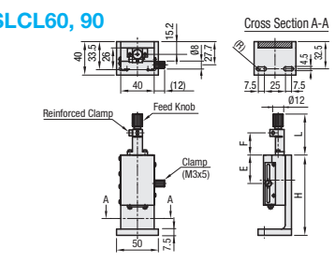

· Upper Mounting Hole Dimensions

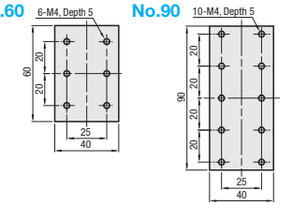

M Material: Aluminum Alloy
S Surface Treatment: Black Anodize

Part Number Type	No.	Stage Surface (mm)	Travel Distance (mm)	Travel per Knob Rotation (mm)	H	(L)	E	F	Load Capacity (N)	Travel Accuracy (µm) Straightness	Weight (kg)	Accessories (2 pcs.) Type M-L	Unit Price 1~9 pc(s).
ZSLCL	60	60x40	±21	4.2	96	49	34	26.5	19.6	30	0.32	CBST4-12	
	90	90x40	±35		140	63	49	40.5			0.40		

Resolution (Vernier Scale Indication): 0.1mm/division
Extension Cover HDEXT12 (Sold Separately): Ø12 feed screw knob can be extended. P.1683
Adjustable Plate XPLT: Utilize when connecting stages with non-matching mounting holes. P.1664
There will be residual clearances with carriage retaining only with a Reinforced Clamp. Use a Clamp Screw in combination.

For orders larger than indicated quantity, please request a quotation.

Ordering Example — Part Number ZSLCL60
Days to Ship
Configure Online
Alterations — Part Number ZSLCL60 - (R) - R

See the CAD data for the details.

Alteration	Spec.	Code	Price Adder
Knob Position (Left / Right Reversed)		R	

Feature: Travel distance per knob rotation is approx. 1/4 of the Rack & Pinion Type. Suitable for fine pitch positioning over a long stroke.

Z-Axis Low Profile
(Lead 4.2mm)

X-Axis P.1673
XY-Axis P.1691

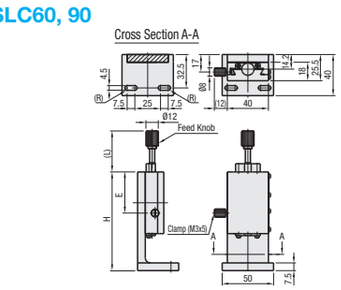

· Upper Mounting Hole Dimensions

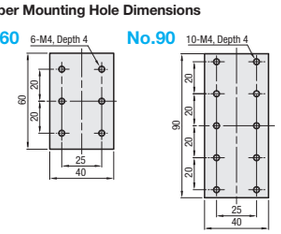

M Material: Aluminum Alloy
S Surface Treatment: Black Anodize

Part Number Type	No.	Stage Surface (mm)	Travel Distance (mm)	Travel per Knob Rotation (mm)	H	(L)	E	Load Capacity (N)	Travel Accuracy (µm) Straightness	Weight (kg)	Accessories (2 pcs.) Type M-L	Unit Price 1~9 pc(s).
ZSLC	60	60x40	±21	4.2	96	40	35	14.7	30	0.27	CBST4-12	
	90	90x40	±35		140	60	40			0.35		

Resolution (Vernier Scale Indication): 0.1mm/division
Extension Cover HDEXT12 (Sold Separately): Ø12 feed screw knob can be extended. P.1683
Adjustable Plate XPLT:Utilize when connecting stages with non-matching mounting holes. P.1664

For orders larger than indicated quantity, please request a quotation.

Ordering Example — Part Number ZSLC90
Days to Ship
Configure Online
Alterations — Part Number ZSLC60 - (R) - R

Alteration	Spec.	Code	Price Adder
Knob Position (Left / Right Reversed)		R	