Cantilever Shafts –Piloted Shafts–

Cantilever Shafts are generally used in combination with rotary bearings, pulleys or as swivel mechanisms. They are often used as the idler portion of a rotary system and are mounted on a flat surface. Choose from a 1045 carbon steel or 304 stainless steel. The P diameter has a very critical tolerance and allows you to precisely locate the part. See the application example for mounting suggestions.

Threaded Shank

Material	Surface Treatment	Type
1045 Steel	Black Oxide	U-FXCC
	Electroless Nickel Plating	U-PFXCC
304 Stainless Steel	–	U-SFXCC

Material Characteristics P.628, 629

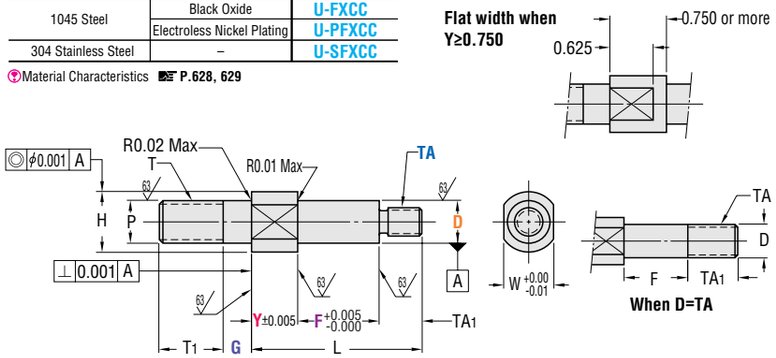

Surface Roughness: Unless otherwise specified 250

General Tolerance
Unless otherwise specified use the table below.

From	To	Tolerance
0.000	5.000	±0.01
5.001	16.000	±0.02
16.001	60.000	±0.05

Thread or hole location tolerance: ±0.005" non-cumulative.

Type	Part No. D Callout	Nominal	Tolerance		Choose in 0.001" Increments Y	F	G	TA Thread Selection (Callout) #8-32	#10-32	1/4-20	5/16-18	3/8-16	1/2-13	5/8-11	3/4-10	1-8
U-FXCC U-PFXCC U-SFXCC	0.25	1/4	0.2498	0.2494	0.125 ~ 2.250	0.250 ~ 3.875	0.188 ~ 0.375	8	10	0.25						
	0.38	3/8	0.3748	0.3744	0.125 ~ 2.250	0.250 ~ 3.875	0.188 ~ 0.375			0.25	0.31	0.38				
	0.50	1/2	0.4998	0.4994	0.125 ~ 2.250	0.250 ~ 3.875	0.188 ~ 0.563			0.25	0.31	0.38	0.50			
	0.63	5/8	0.6248	0.6244	0.125 ~ 2.250	0.375 ~ 5.750	0.188 ~ 0.563				0.31	0.38	0.50	0.63		
	0.75	3/4	0.7497	0.7492	0.156 ~ 2.875	0.375 ~ 5.750	0.188 ~ 0.750					0.38	0.50	0.63	0.75	
	1.00	1"	0.9997	0.9992	0.156 ~ 2.875	0.375 ~ 5.750	0.188 ~ 0.750						0.50	0.63	0.75	1.00

The part number consists only of the fields with blue characters. Please refer to the table below for technical information.

Order Example

Part No. — Y — F — G — TA

Type D

U-FXCC 0.50 — Y 1.375 — F 1.000 — G 0.375 — TA 0.50

Technical Information

D Callout	D Nominal	L	P Dia.	P Tolerance		T (Thread) Size	T1	H	W
0.25	1/4	Y+F+TA1	0.2500	0.2498	0.2494	1/4-20	0.375	0.50	0.438
0.38	3/8	Y+F+TA1	0.3750	0.3748	0.3744	3/8-16	0.563	0.59	0.500
0.50	1/2	Y+F+TA1	0.5000	0.4998	0.4994	1/2-13	0.750	0.69	0.560
0.63	5/8	Y+F+TA1	0.6250	0.6248	0.6244	5/8-11	0.938	0.81	0.688
0.75	3/4	Y+F+TA1	0.7500	0.7497	0.7492	3/4-10	1.125	1.00	0.875
1.00	1"	Y+F+TA1	1.0000	0.9997	0.9992	1-8	1.500	1.25	1.125

TA (Thread) Callout	Thread Size	Major Dia.	TA1
8	#8-32	0.164	0.246
10	#10-32	0.190	0.285
0.25	1/4-20	0.250	0.375
0.31	5/16-18	0.313	0.469
0.38	3/8-16	0.375	0.563
0.50	1/2-13	0.500	0.750
0.63	5/8-11	0.625	0.938
0.75	3/4-10	0.750	1.125
1.00	1-8	1.000	1.500

Undercut Dimensions & Details

TA (Thread)	g (max)	r	f
#8-32	0.047	0.012	0.122
#10-32	0.047	0.012	0.138
1/4-20	0.098	0.024	0.189
5/16-18	0.098	0.024	0.244
3/8-16	0.098	0.024	0.299
1/2-13	0.118	0.039	0.409
5/8-11	0.118	0.039	0.520
3/4-10	0.157	0.039	0.630
1-8	0.197	0.059	0.846

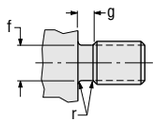

Days to Ship

Standard: 6 Days — Non-Returnable P.30

Express: 4 Days (Specify Express A) $ 8.00/piece P.30

A flat charge of $21.60 for 3 or more identical pieces.

Price

Quantity Discount Rate

Quantity	1	2~4	5~19	20~
Rate	—	5%	10%	15%

For larger quantity orders "Days to Ship" may differ from published catalog term. P.29

D	$ Unit Price U-FXCC	U-PFXCC	U-SFXCC
0.25	17.80	21.40	26.60
0.38	20.80	24.80	31.20
0.50	23.40	28.10	35.30
0.63	26.90	32.20	40.30
0.75	34.30	41.20	51.50
1.00	40.60	48.70	60.80

Optional Modifications

Part No. — Y — F — G — TA — (Ordering Code) (YKC, WSC)

Type D

U-FXCC 0.50 — Y 1.375 — F 1.000 — G 0.375 — TA 0.50 — YKC

	Y Dimension Tolerance	Wrench Flats Added
Optional Modifications	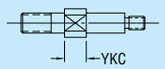	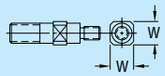
Ordering Code	YKC	WSC
Details	Changes the Y dimension tolerance to ±0.002. Example YKC	Wrench flats have been changed from 2 sides to 4 sides. Example WSC
$ Price Adder	4.00	4.00

When using Optional Modifications, add the "Price Adder" to the standard "Unit Price".

Example

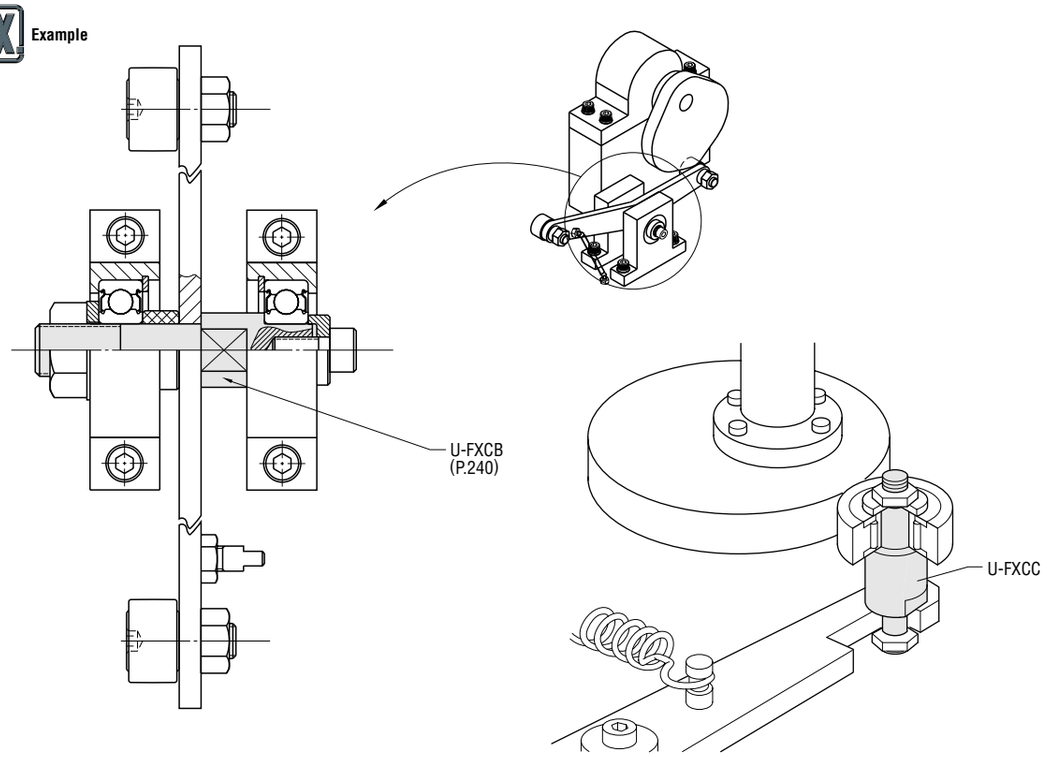

Express Options P.30
MiSUMi www.misumiusa.com E-mail: inquire@misumiusa.com
TEL.1-847-843-9105 FAX.1-847-843-9107 TOLL FREE TEL.1-800-681-7475 TOLL FREE FAX.1-800-681-7402